REV. LTR.	DESCRIPTION	APPROVAL	DATE
A2	Update drawing	W.Q.LI	2024.06.06

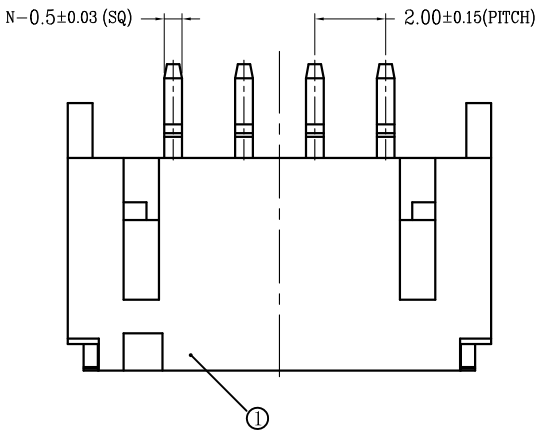

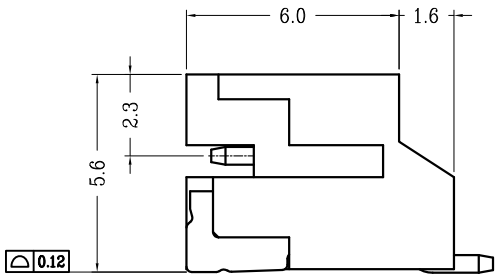

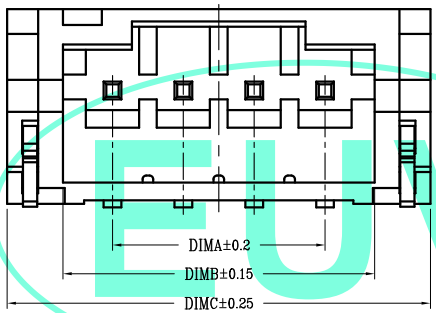

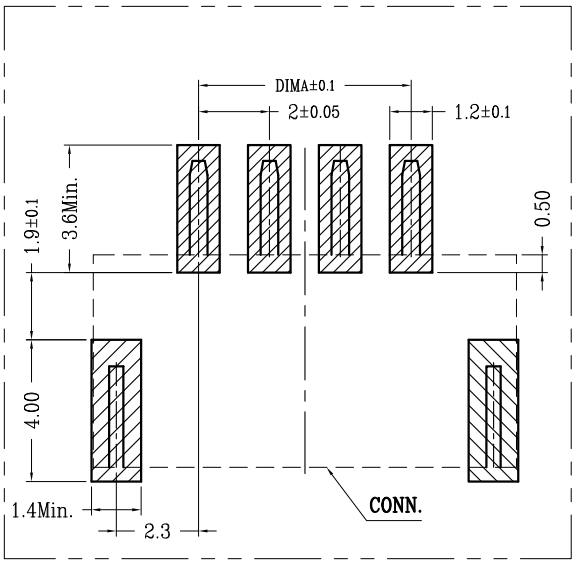

Recommended P.C.B Layout
General Tolerance±0.05

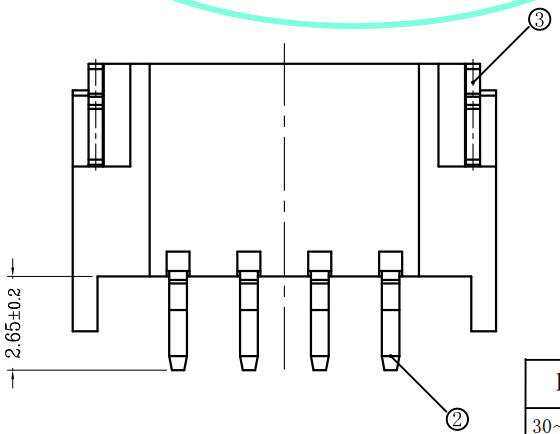

Specifications:

1. Voltage rating:200V AC/DC.
2. Current rating:2.0A AC/DC.
3. Withstanding voltage:500V AC/minute.
4. Ambient temperature range:-40～+85℃.
5. Insulation resistance:≧1000MΩ.
6. Contact resistance:≦20mΩ.
7. Applicable wire Sizes:AWG#22～#28.
8. Housing①:LCP UL94-0 Natural.
9. Upper terminal②:Brass/Tin Plating.
10. Fitting Nail③:Brass/Tin Plating.

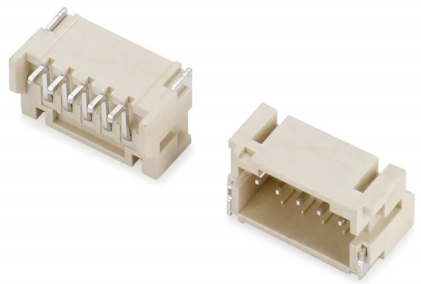

Outside drawing

Product material No:
EN200AWT-**-* * *-*

- NO OF Poles
- Terminal Plating
  - B=Bright-Tin
  - M=Mist-Tin
  - G=Gold flash
- Plastic Material
  - P=PA6T
  - T=PA9T
  - L=LCP
- Plastic Color
  - Y=Faint Yellow
  - R=Red
  - B=Black
  - W=White
- Packing
  - T=Tube
  - B=Bag
  - R=Tape&Reel

Pin number:

Poles	DIM A	DIM B	DIM C	Poles	DIM A	DIM B	DIM C
2P	2.00	4.80	7.95	12P	22.00	24.80	27.95
3P	4.00	6.80	9.95	13P	24.00	26.80	29.95
4P	6.00	8.80	11.95	14P	26.00	28.80	31.95
5P	8.00	10.80	13.95	15P	28.00	30.80	33.95
6P	10.00	12.80	15.95	16P	30.00	32.80	35.95
7P	12.00	14.80	17.95	17P	32.00	34.80	37.95
8P	14.00	16.80	19.95	18P	34.00	36.80	39.95
9P	16.00	18.80	21.95	19P	36.00	38.80	41.95
10P	18.00	20.80	23.95	20P	38.00	40.80	43.95
11P	20.00	22.80	25.95				

RoHS compliant

Pb Lead-free

http://www.euvchn.com		EUV ELECTRONICS CO.,LTD 兆進電子有限公司			
30～Above ±0.30	ANGLE:∠±1°				
10～30 ±0.20	SCALE:1:1	TITLE	2.00mm Connectors (90° SMT)		
5～10 ±0.15	SHEET:1 OF 1	PART NO.	EN200AWT-**-***-*		
0～5 ±0.10	PROJECT	APPROVAL	CHECK	DRAWN	DATE
TOLERANCESARE (UNIT:mm)	SIZE:A4	W.Q.LI	X.H.LIN	K.J.ZENG	2024.06.06